Drawings

A drawing region illustrates the sheet with simple shapes, drawn and corrected in Symbolical, saved in the document and printed as vectors. Insert it with Insert > Insert Drawing; a double-click edits it, Escape or a click outside it ends its edition. It is not computed: its place in the sheet changes nothing to the calculation.

Figure 1

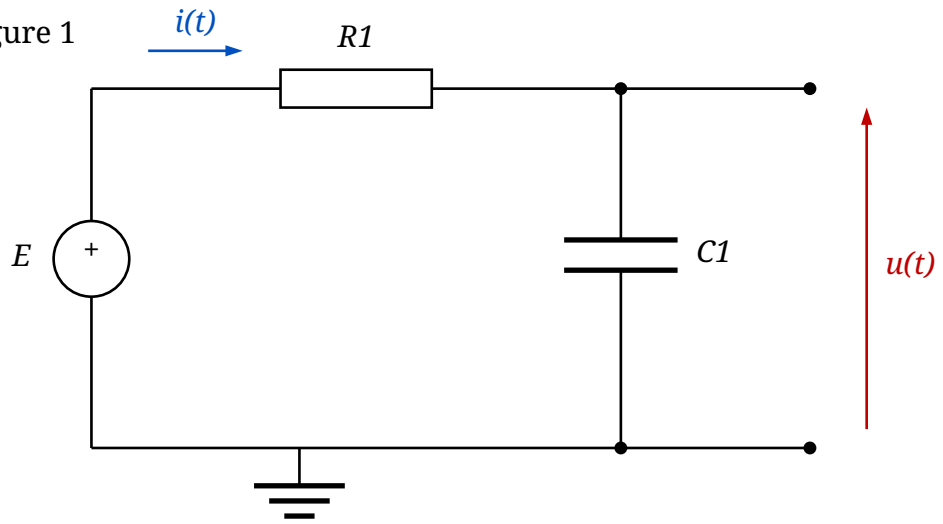

The tools. The palette above the region edited selects, draws segments, polylines, smooth curves through points, rectangles, ellipses and texts. The points fall on the grid, whose step is set in the palette; Shift gives 45°, squares and circles. The palette also sets the color, the width and the pattern of the lines, the fill of the closed shapes, the arrows and dots at the ends of the lines, the size and the alignment of the texts. A right click on the shapes brings them to the front, groups them (Ctrl+G) as a symbol, like the capacitor and the ground here, copied between regions and documents with Ctrl+C and Ctrl+V.

Charging the capacitor. At t = 0, the source E charges the capacitor C1 through the resistor R1: u(t) = E·(1 − e^(−t/τ)), with the time constant τ = R1·C1. After τ, the capacitor is charged to 63 % of E; after 5·τ, to more than 99 %. The components are named R1 and C1 as on the drawing: C alone is the coulomb.

$$E := 5\ \text{V} \qquad R1 := 4.7\ \text{k}\Omega \qquad C1 := 10\ \mu\text{F} \qquad \tau := R1 \cdot C1 \qquad \tau = 47\ \text{ms}$$

$$u(t) := E\left(1 - e^{-\frac{t}{\tau}}\right) \qquad u(\tau) = 3.161\ \text{V}$$

Charge of the capacitor

$u(t)$

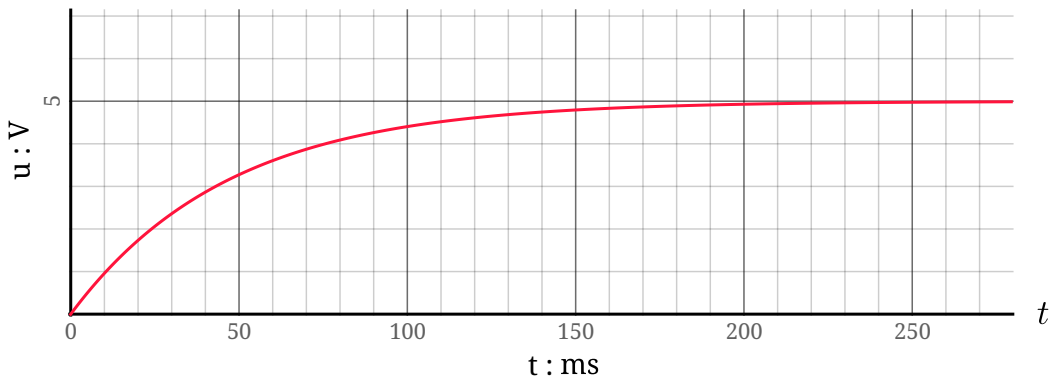

$$u_R(t) := E - u(t)$$

$$i_R(t) := \frac{u_R(t)}{R1}$$

